Optical Specification

Model		Lens, IDS, IDS-12M23-C2528, 25 mm, 2/3"
Article Number		1008357
Resolution		2.2 µm
Mount		C-Mount
Sensor		ϕ11(2/3")
Focal Length		25 mm
Adjustion Type		Manual
F NO.		F2.8~F16
Working Distance		150~infinity
Field Angle	1/3"(H x V x D)	10.96° x 8.23° x 13.68°
	1/2.5"(H x V x D)	11.69° x 8.78° x 14.58°
	1/2"(H x V x D)	14.58° x 10.96° x 18.18°
	2/3"(H x V x D)	19.96° x 15.04° x 24.81°
Distortion		<0.15% at WD300
Weight		0.05 kg
Back Focal Length		16.63 at WD150
		12.65 at infinity
Size		ϕ29 x 34
Filter Thread		M27 x 0.5-6H
Working Temperature		-20°C~+60°C

Unit:mm

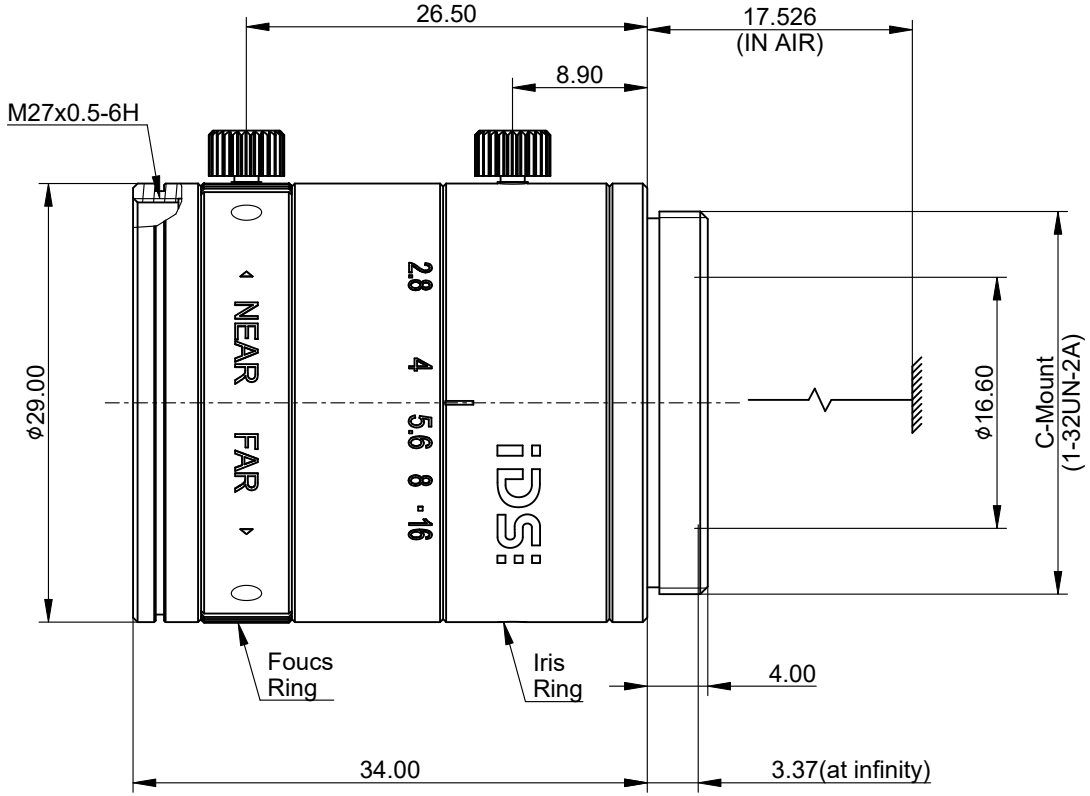

View Angle	Remark	Item	Signature	Date
		Drawing		
Standard Different		Design		
		Check		
		Approve		
IT14		Paper Size	A4	
		Revised Date	2023.07.25	

IDS Imaging Development Systems GmbH

Lens, IDS, IDS-12M23-C2528, 25 mm, 2/3"

Scale		Page	1/1	Version	A01

Copyright © 2023 by
IDS Imaging Development Systems GmbH
All Rights Reserved